# 66SV SERIES
# DIMENSIONS AND WEIGHTS AT 50 Hz, 2 POLES

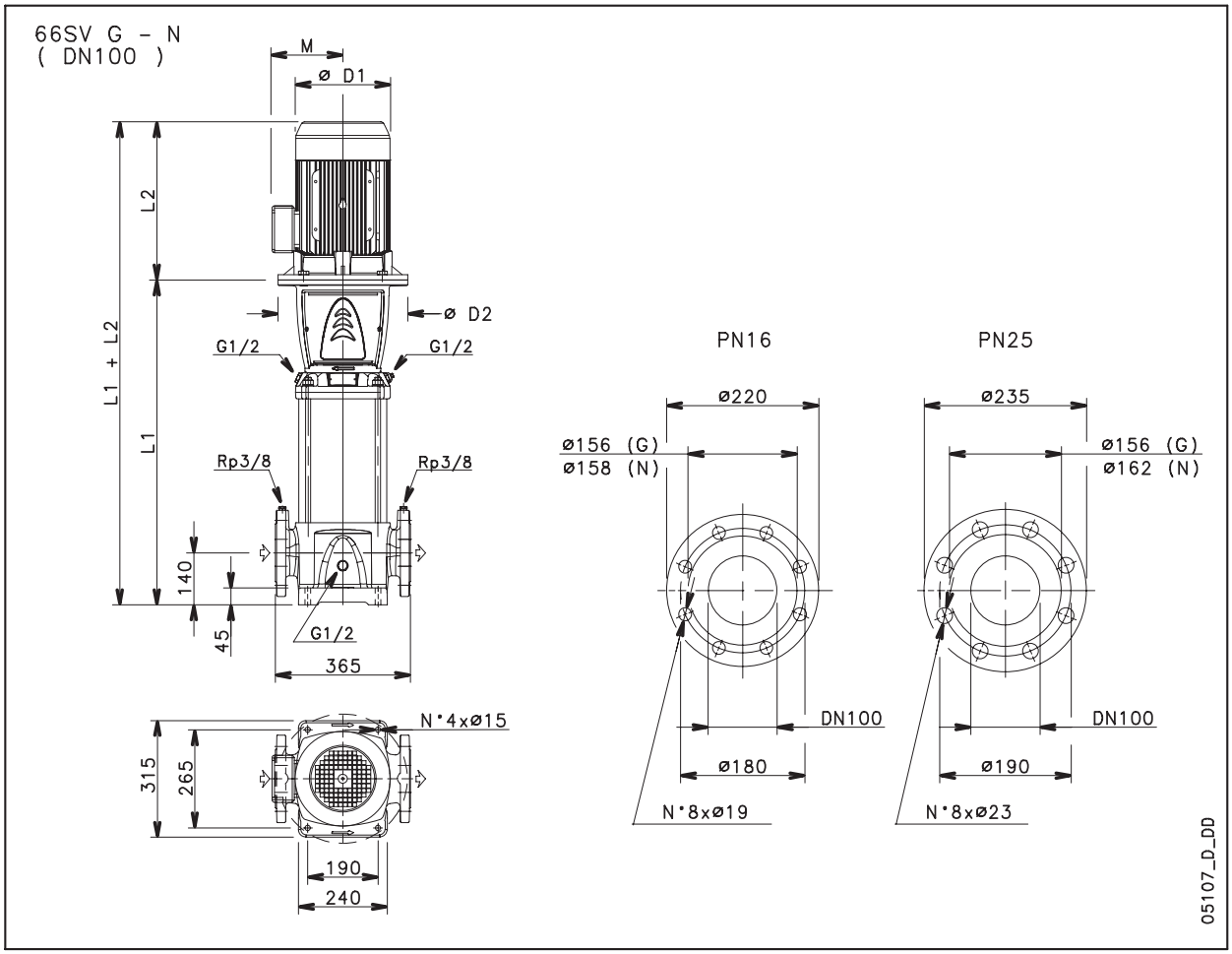


| PUMP TYPE | MOTOR | | DIMENSIONS (mm) | | | | | | WEIGHT kg | |
|---|---|---|---|---|---|---|---|---|---|---|
| | kW | SIZE | L1 | L2 | D1 | D2 | M | PN | PUMP | ELECTRIC PUMP |
| 66SV1/1A | 4 | 112 | 554 | 319 | 197 | 164 | 154 | 16 | 66 | 92,5 |
| 66SV1 | 5,5 | 132 | 574 | 375 | 214 | 300 | 168 | 16 | 72 | 110 |
| 66SV2/2A | 7,5 | 132 | 664 | 367 | 256 | 300 | 191 | 16 | 77 | 133 |
| 66SV2/1A | 11 | 160 | 699 | 428 | 256 | 350 | 191 | 16 | 81 | 151 |
| 66SV2 | 11 | 160 | 699 | 428 | 256 | 350 | 191 | 16 | 81 | 151 |
| 66SV3/2A | 15 | 160 | 789 | 494 | 313 | 350 | 240 | 16 | 86 | 188 |
| 66SV3/1A | 15 | 160 | 789 | 494 | 313 | 350 | 240 | 16 | 86 | 188 |
| 66SV3 | 18,5 | 160 | 789 | 494 | 313 | 350 | 240 | 16 | 86 | 197 |
| 66SV4/2A | 18,5 | 160 | 879 | 494 | 313 | 350 | 240 | 16 | 92 | 203 |
| 66SV4/1A | 22 | 180 | 879 | 494 | 313 | 350 | 240 | 16 | 93 | 214 |
| 66SV4 | 22 | 180 | 879 | 494 | 313 | 350 | 240 | 16 | 93 | 214 |
| 66SV5/2A | 30 | 200 | 969 | 657 | 402 | 400 | 317 | 16 | 105 | 320 |
| 66SV5/1A | 30 | 200 | 969 | 657 | 402 | 400 | 317 | 16 | 105 | 320 |
| 66SV5 | 30 | 200 | 969 | 657 | 402 | 400 | 317 | 16 | 105 | 320 |
| 66SV6/2A | 30 | 200 | 1059 | 657 | 402 | 400 | 317 | 25 | 113 | 328 |
| 66SV6/1A | 30 | 200 | 1059 | 657 | 402 | 400 | 317 | 25 | 113 | 328 |
| 66SV6 | 37 | 200 | 1059 | 657 | 402 | 400 | 317 | 25 | 113 | 343 |
| 66SV7/2A | 37 | 200 | 1149 | 657 | 402 | 400 | 317 | 25 | 118 | 348 |
| 66SV7/1A | 37 | 200 | 1149 | 657 | 402 | 400 | 317 | 25 | 118 | 348 |

| PUMP TYPE | MOTOR | | DIMENSIONS (mm) | | | | | | WEIGHT kg | |
|---|---|---|---|---|---|---|---|---|---|---|
| | kW | SIZE | L1 | L2 | D1 | D2 | M | PN | PUMP | ELECTRIC PUMP |
| 66SV7 | 45 | 225 | 1149 | 746 | 455 | 450 | 384 | 25 | 122 | 478 |
| 66SV8/2A | 45 | 225 | 1239 | 746 | 455 | 450 | 384 | 25 | 127 | 483 |
| 66SV8/1A | 45 | 225 | 1239 | 746 | 455 | 450 | 384 | 25 | 127 | 483 |
| 66SV8 | 45 | 225 | 1239 | 746 | 455 | 450 | 384 | 25 | 127 | 483 |

## 66SV SERIES
## OPERATING CHARACTERISTICS AT 50 Hz, 2 POLES

| 66SV | ~ 2900 [rpm] | ISO 9906 - Annex A |
|---|---|---|

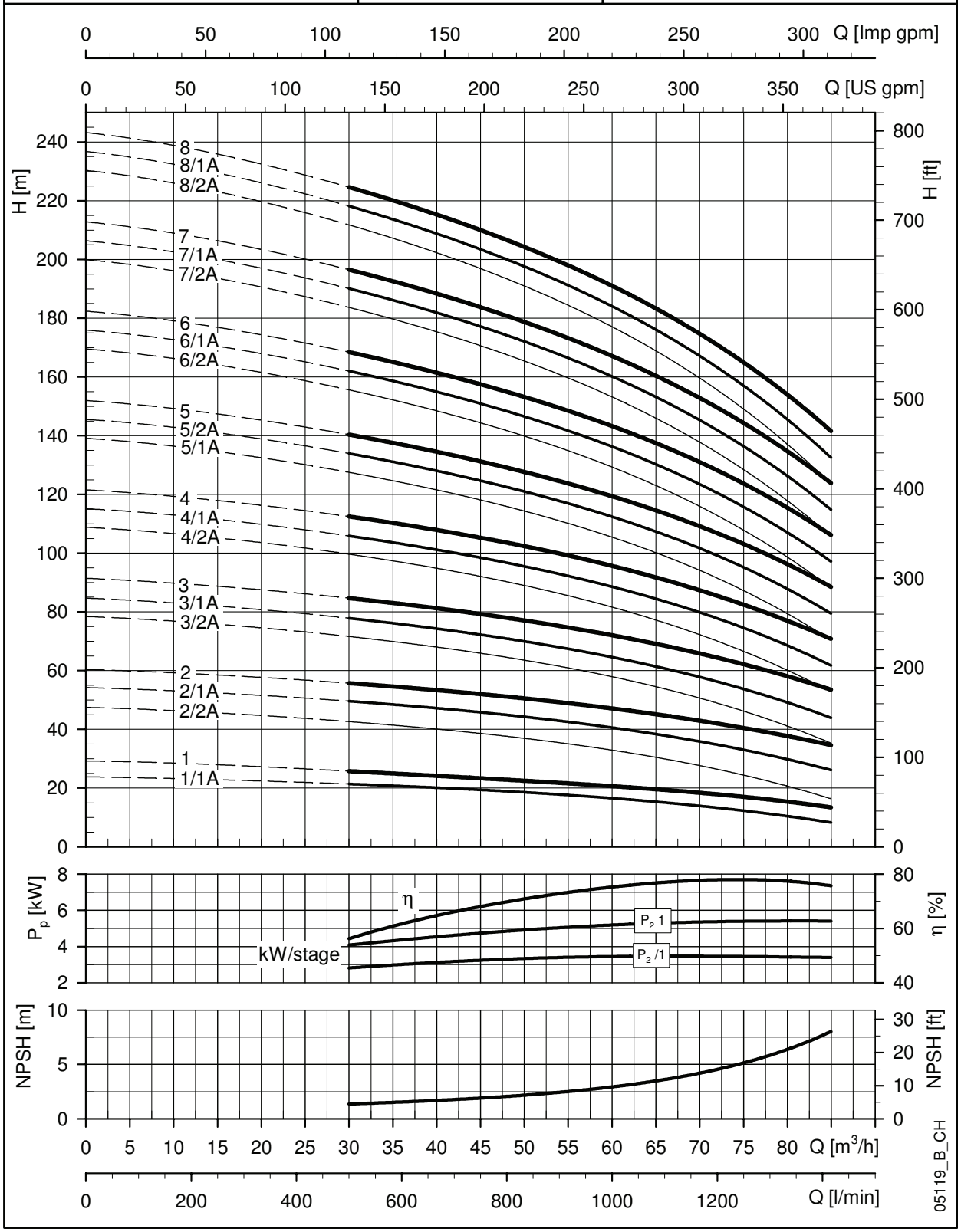


These performances are valid for liquids with density ρ = 1.0 Kg/dm³ and kinematic viscosity ν = 1 mm²/sec.