46SV SERIES
DIMENSIONS AND WEIGHTS AT 50 Hz, 2 POLES

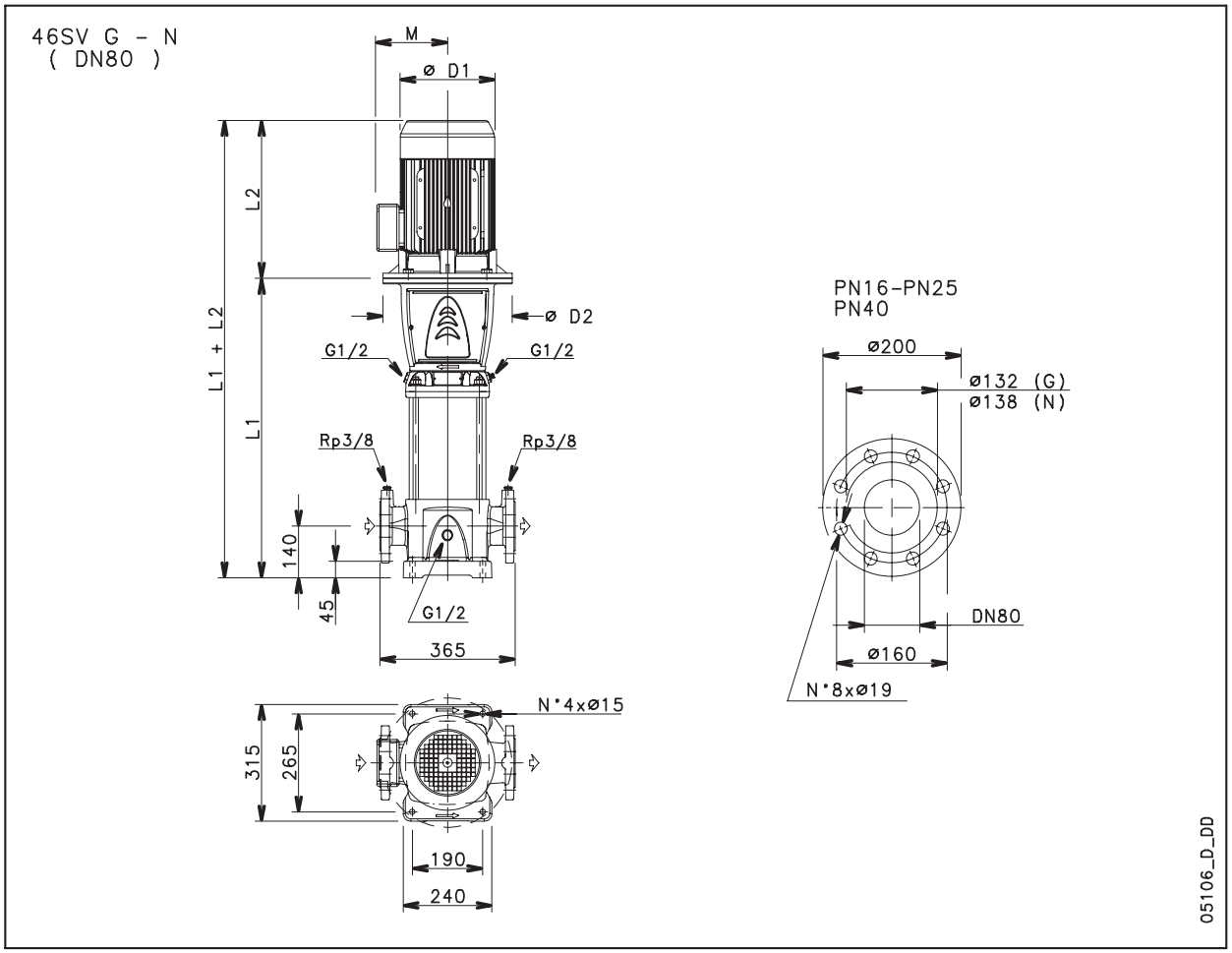

PUMP TYPE	MOTOR		DIMENSIONS (mm)						WEIGHT kg	
	kW	SIZE	L1	L2	D1	D2	M	PN	PUMP	ELECTRIC PUMP
46SV1/1A	3	100	529	298	174	164	134	16	58	79
46SV1	4	112	529	319	197	164	154	16	58	84,5
46SV2/2A	5,5	132	624	375	214	300	168	16	66	104
46SV2	7,5	132	624	367	256	300	191	16	66	122
46SV3/2A	11	160	734	428	256	350	191	16	74	144
46SV3	11	160	734	428	256	350	191	16	74	144
46SV4/2A	15	160	809	494	313	350	240	16	78	180
46SV4	15	160	809	494	313	350	240	16	78	180
46SV5/2A	18,5	160	884	494	313	350	240	16	82	193
46SV5	18,5	160	884	494	313	350	240	16	82	193
46SV6/2A	22	180	959	494	313	350	240	25	87	208
46SV6	22	180	959	494	313	350	240	25	87	208
46SV7/2A	30	200	1034	657	402	400	317	25	97	312
46SV7	30	200	1034	657	402	400	317	25	97	312
46SV8/2A	30	200	1109	657	402	400	317	25	101	316
46SV8	30	200	1109	657	402	400	317	25	101	316
46SV9/2A	30	200	1184	657	402	400	317	25	105	320
46SV9	37	200	1184	657	402	400	317	25	105	335
46SV10/2A	37	200	1259	657	402	400	317	40	114	344

PUMP TYPE	MOTOR		DIMENSIONS (mm)						WEIGHT kg	
	kW	SIZE	L1	L2	D1	D2	M	PN	PUMP	ELECTRIC PUMP
46SV10	37	200	1259	657	402	400	317	40	114	344
46SV11/2A	45	225	1334	746	455	450	384	40	126	482
46SV11	45	225	1334	746	455	450	384	40	126	482
46SV12/2A	45	225	1409	746	455	450	384	40	131	487
46SV12	45	225	1409	746	455	450	384	40	131	487
46SV13/2A	45	225	1484	746	455	450	384	40	135	491

46SV SERIES
OPERATING CHARACTERISTICS AT 50 Hz, 2 POLES

46SV	~ 2900 [rpm]	ISO 9906 - Annex A

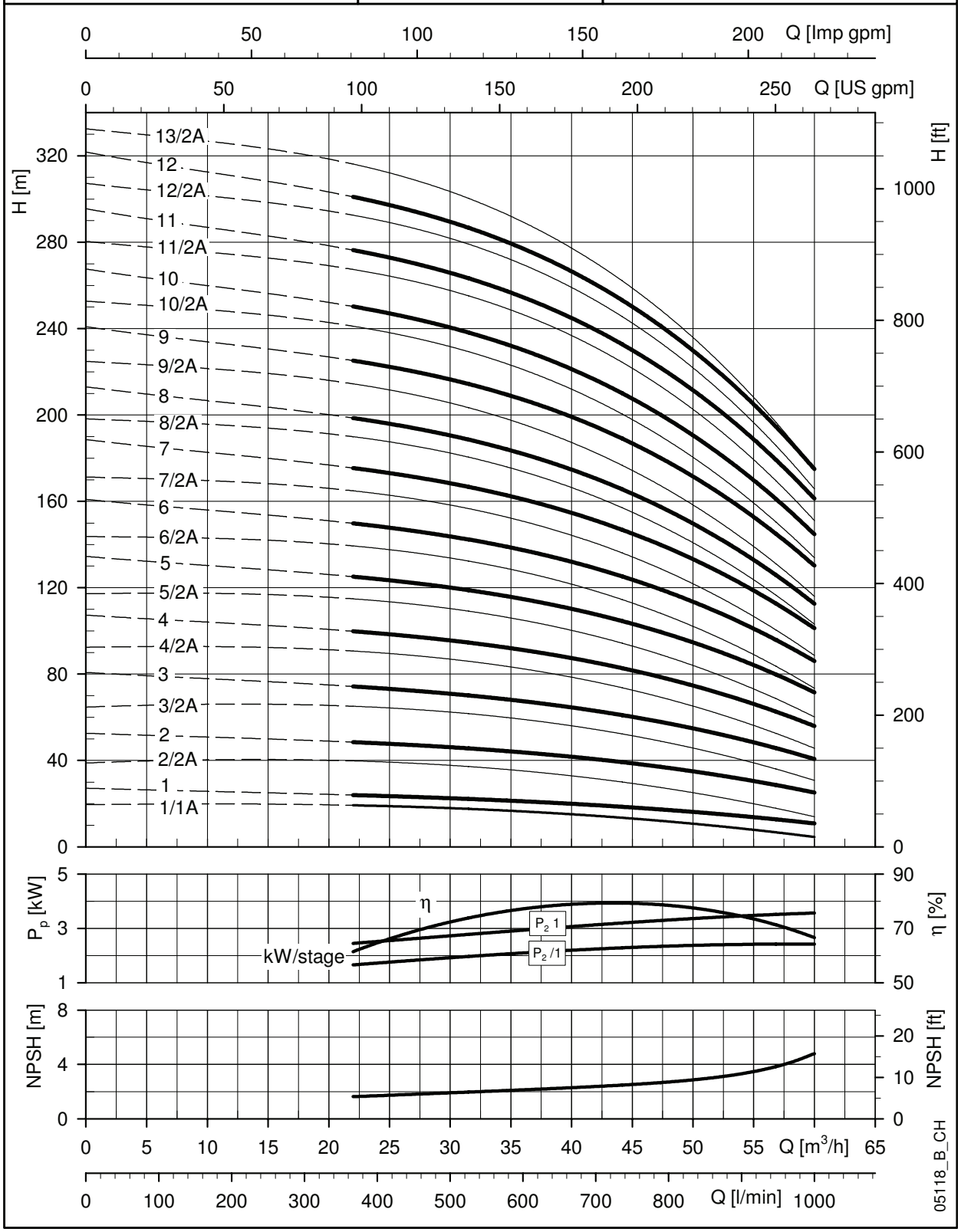

These performances are valid for liquids with density ρ = 1.0 Kg/dm³ and kinematic viscosity ν = 1 mm²/sec.